Since 1949
Acme Sanitary Ware Co. Ltd.
1/F, Acme Building, 22-28 Nanking Street, Kowloon, Hong Kong
Tel: 2388 7171 Fax: 2710 8012
Email: acme@acmesanitary.com.hk
Website: www.acmesanitary.com.hk

American Standard

		REF		REV	ITEM CODE	
LOCATION		DATE			PAGE	

SANITARY WARE SPECIFICATION SHEET

Item Descriptions	American Standard (Thailand) "Neo Modern" Soft closing seat and cover
Dimensions	L476 x W379 x H55 mm
Model	CL6156M-6D
Material /Colour	Plastic / White
Manufacturer	American Standard (Thailand)
Source	Acme Sanitary Ware Co. Ltd Mr. Eric Wong/ Mr. Don Yuen
Contact Tel/Fax	(852) 2388-7171 / (852) 2710-8012
E-mail	acme@acmesanitary.com.hk
Website	www.acmesanitary.com.hk

Illustration/ Drawing







PC-61030NS
Hinge set



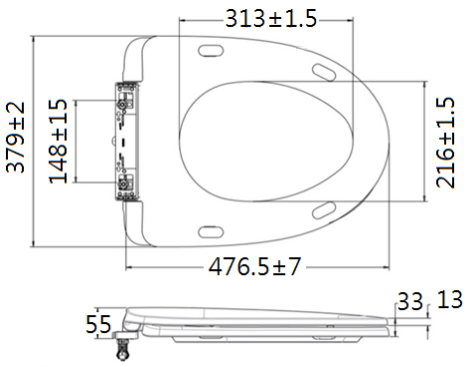

Note: Equivalent to CP-C630.026.04 / 61000NS / 61000NS-WT

** All information of the above is for the reference only. No prior notice is made if any changes.*